JCB | PILINGMASTER

Gross power: 81kW (109hp) Maximum drilling depth: 14m (45' 11") Maximum head torque: 12500Nm

INTRODUCING THE PILING MASTER.

JCB IS PROUD TO ANNOUNCE A UNIQUE NEW CONCEPT FOR THE PILING INDUSTRY. UNLIKE DEDICATED PILING MACHINES, OUR INNOVATIVE AND VERSATILE BACKHOE-BASED PILINGMASTER IS A TRUE ALL-ROUNDER THAT ISN'T LIMITED TO ONE USE.

An all-new approach.

The construction, housing and infrastructure sectors face very distinct geotechnical challenges. And, until now, there's never been a single-machine solution to the most common of these challenges. However, after two years of intensive R&D, JCB has developed the new Pilingmaster, the UK's first dedicated OEM piling solution.

Specially designed for the piling industry, the new JCB Pilingmaster is fast and easy to deploy, road legal*, and can pile to depths of 14m. You can then use the loader end to remove unwanted material. Best of all, this entire task can be carried out by just one operator from start to finish.

*Region dependant.

Traditional tracked piling rigs are highly specialised machines, dedicated solely to drilling piles. What's more, they're timeconsuming to set up and expensive to transport. For example, you need to use large mats to keep your rig level, stable and safe to operate. The new JCB Pilingmaster suffers none of these limitations.

Scratching the surface.

1 The new JCB Pilingmaster is compatible with a wide range of augers (350, 450 and 600mm diameter) to suit many piling needs.

2 A hydraulic driven Brevini® winch with automatic brake prevents your operators from over-winding the wire rope.

3 There's a dipper cylinder limiter which prevents over-extension and reduces the risk of damage.

4 LED lights keep your working area well-illuminated.

Drilling deeper.

5 The piling rig features a robust in-house kelly-bar design with multiple inner sections. This setup allows the machine to reach impressive dig depths of up to 14m (45' 11").

6 The new Pilingmaster is tried and proven; we've field tested it exhaustively across a huge variety of different geotechnical conditions.

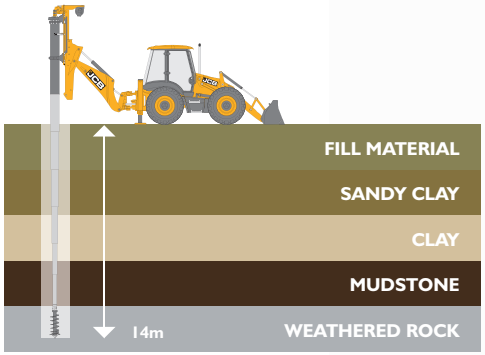

MADE FOR PILING.

THERE'S NEVER BEEN A GREATER DEMAND FOR AFFORDABLE HOUSING AND, IN TURN, MACHINERY TO HELP CONVERT DEVELOPMENT SITES INTO VIABLE BUILDING PLOTS. THESE PLOTS OFTEN REQUIRE PILED FOUNDATIONS, WHICH THE NEW JCB PILINGMASTER IS TAILOR-MADE TO CREATE.

High performance.

1 Piling performance is impressive on the new JCB Pilingmaster: 1.25 tonnes of head torque equates to a powerful drilling force. You can also vary piling diameter from 350mm to 600mm for maximum flexibility, and pile up to a depth of 14m to carry out deep foundation work. A full flow-sharing hydraulic system with a maximum flow rate of 165 l/min makes it easy to multifunction while you're piling.

2 JCB's Powerslide feature is fitted as standard, meaning that you can drill multiple piles from a single position. The resulting increased working radius boosts productivity and reduces ground damage.

High practicality.

3 With an operating weight of under 12 tonnes, you can significantly reduce your need for piling mats.

4 An auger depth gauge is fitted to both sides of the mast to minimise the risk of over-flighting the tool.

5 Boom geometry is perfectly balanced so you can pile close to existing structures. Coupled with a backhoe loader's natural manoeuvrability, this makes the new Pilingmaster far superior to traditional piling rigs in confined spaces.

The new Pilingmaster is not only a purpose-built piling rig; it's also a highly versatile backhoe loader. However, you can acquire one for a lower capital cost than a traditional piling machine.

1

2

3

4

5

Excelling on the ground.

1 A travel height of under 4m ensures that the new JCB Pilingmaster complies with road regulations* and allows easy site access.

2 You can road at up to 40km/h, ensuring rapid and easy mobilisation between sites.

3 Limited slip differentials optimise traction in all ground conditions and help to reduce tyre wear.

4 Optimised weight distribution and a low centre of gravity combine to minimise ground bearing pressure. This provides great stability for piling, loading and roading.

5 We fit our Auto Smoothride System as standard, increasing operator comfort on and off-road, as well as improving load retention.

*Region dependant.

A SAFER CHOICE.

SAFETY IS A MAJOR PRIORITY ON ANY MODERN CONSTRUCTION SITE. WE'VE THEREFORE DESIGNED THE NEW JCB PILINGMASTER TO PROTECT ITSELF, ITS OPERATOR AND SITE PERSONNEL TOO.

Premium protection.

1 Emergency stop switches are fitted both internally and externally to isolate the hydraulics on the new JCB Pilingmaster.

2 Damage can occur on any site, so rear light guards are fitted as standard for added impact protection.

3 Dedicated LEDlights mounted on the piling rig help to provide clear visibility to the auger at all times.

4 To make access as safe as possible, operators have three points of contact at all times on the steps (which are of a large anti-slip open grill design to stop material build up).

5 A large built-in lockable toolbox provides safe storage for tools and other items.

6 If the stabilisers aren't fully retracted when the machine is on the move, a warning system alerts the operator.

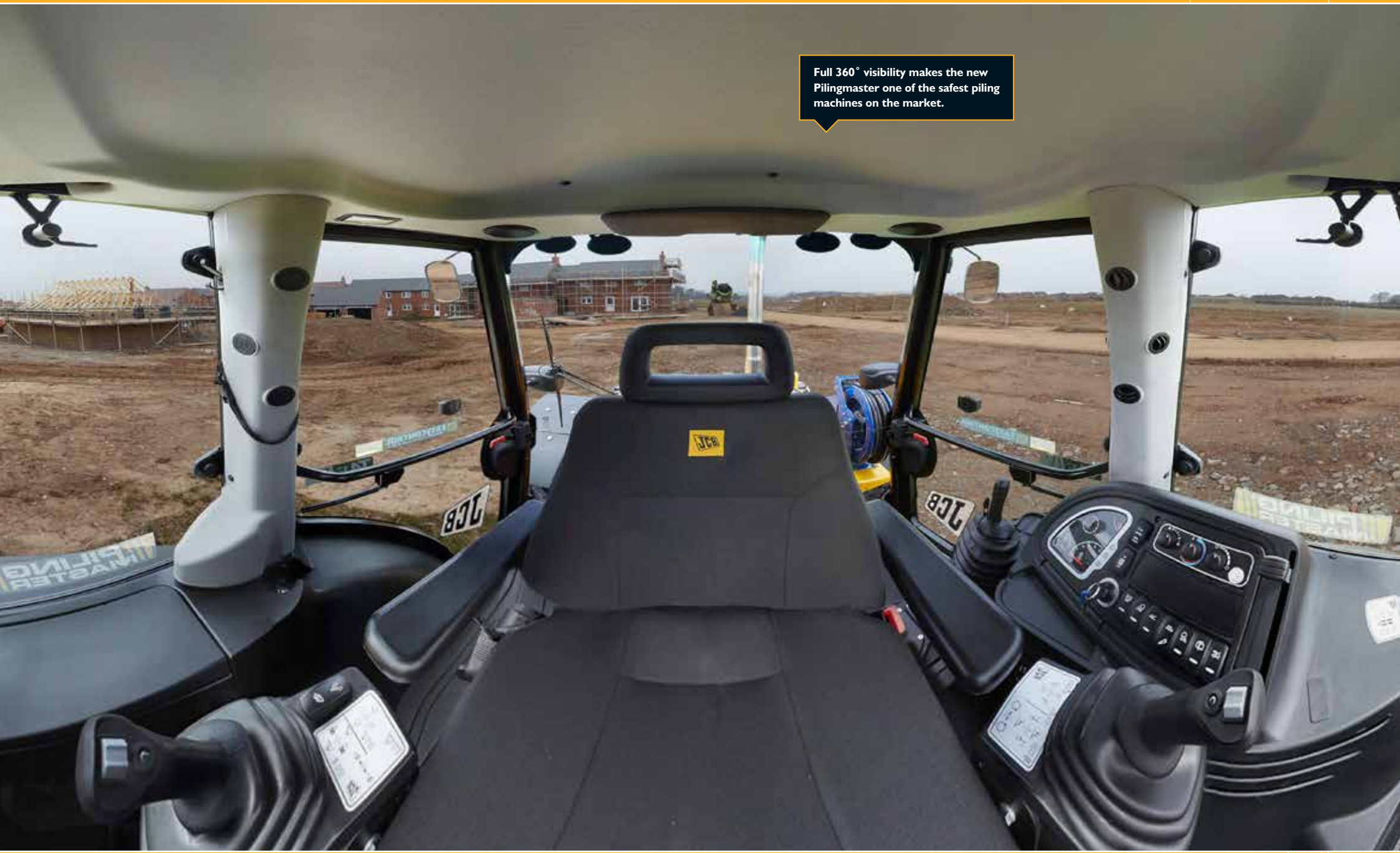

Full 360° visibility makes the new Pilingmaster one of the safest piling machines on the market.

COMFORTABLY SUPERIOR.

CONVENTIONAL PILING RIGS OFTEN REQUIRE SPECIALIST EXPERIENCE TO OPERATE, WHEREAS THE NEW JCB PILINGMASTER USES THE SAME WORKING ENVIRONMENT AS OUR AWARD WINNING BACKHOE RANGE. AS SUCH, IT'S COMFORTABLE, SPACIOUS, ERGONOMIC AND INTUITIVE, MAKING OPERATORS FEEL AT HOME STRAIGHT AWAY.

1

Moving productivity forward.

1 JCB's all-day-comfy heated full air-suspension seat houses the excavator-style servo controls. This makes for great manoeuvrability, fingertip control and supreme comfort. A fully glazed cab provides excellent 360-degree visibility.

2 Our Advanced EasyControl system makes it comfortable, logical and easy to control the loader end of your machine via the joystick.

3 The new in-cab electronic display provides operators with all the key information they need for accurate piling: verticality, piling depth and pressure indicators for downforce/applied rotary torque.

4 There's a generous amount of storage in a JCB Pilingmaster cab. Work tools are easy to carry, and the working environment is well-organised.

2

3

4

EASY, EFFICIENT, AUTOMATE.

Introducing ...

AUTOMATE

... for the world's number one Backhoe Loader

JCB'S ALL-NEW AUTOMATE SYSTEM COMPRISES A SET OF INNOVATIVE AND INTELLIGENT ELECTRONIC FEATURES TO IMPROVE THE USABILITY AND FUEL EFFICIENCY OF YOUR NEW PILINGMASTER EVEN FURTHER.

1 AUTOCHECK

Looking under the bonnet of your backhoe is a thing of the past because all routine engine checks are automatically carried out at the start of every working day.

2 AUTOIDLE

This useful feature automatically returns engine revs to idle after a chosen period, saving you time and effort. It also offers potential fuel savings of £122 per year (based on a 1500-hour cycle).

3 AUTOTHROTTLE

Engine speed can be automatically returned to a preset hand throttle position when you resume work after a pause. This also improves ease of use, saves time and reduces effort.

4 AUTODRIVE

Maintain your chosen engine speed while roading. The feature automatically disengages when you press the brake or the switch.

5 AUTOSRS

To increase productivity, this feature increases load retention, roading speed and operator comfort. It activates automatically without the operator needing to do anything, and it deactivates at a preset speed.

6 AUTOLOCK

With this feature, you don't have to worry about a boomlock cable; unlocking is done automatically via servo activation.

7 AUTOSTABS

With a single touch of the lever, the stabilisers will fully retract on their own, saving time and effort.

8 AUTOPREHEAT

You can programme your machine to automatically heat its engine block and cab – and defrost its windscreen – up to 30 minutes before using it.

T4F IV

1

2

3

4

5

6

7

8

JCB HOW TO... AUTOMATE

Take a look at the video below for an introduction to thelatest Automate features on the JCB Backhoe Loader. You can also visit our YouTube channel to watch the series of 'How To' videos and discover how you can get the most from your machine.

THE WORD ON THE GROUND.

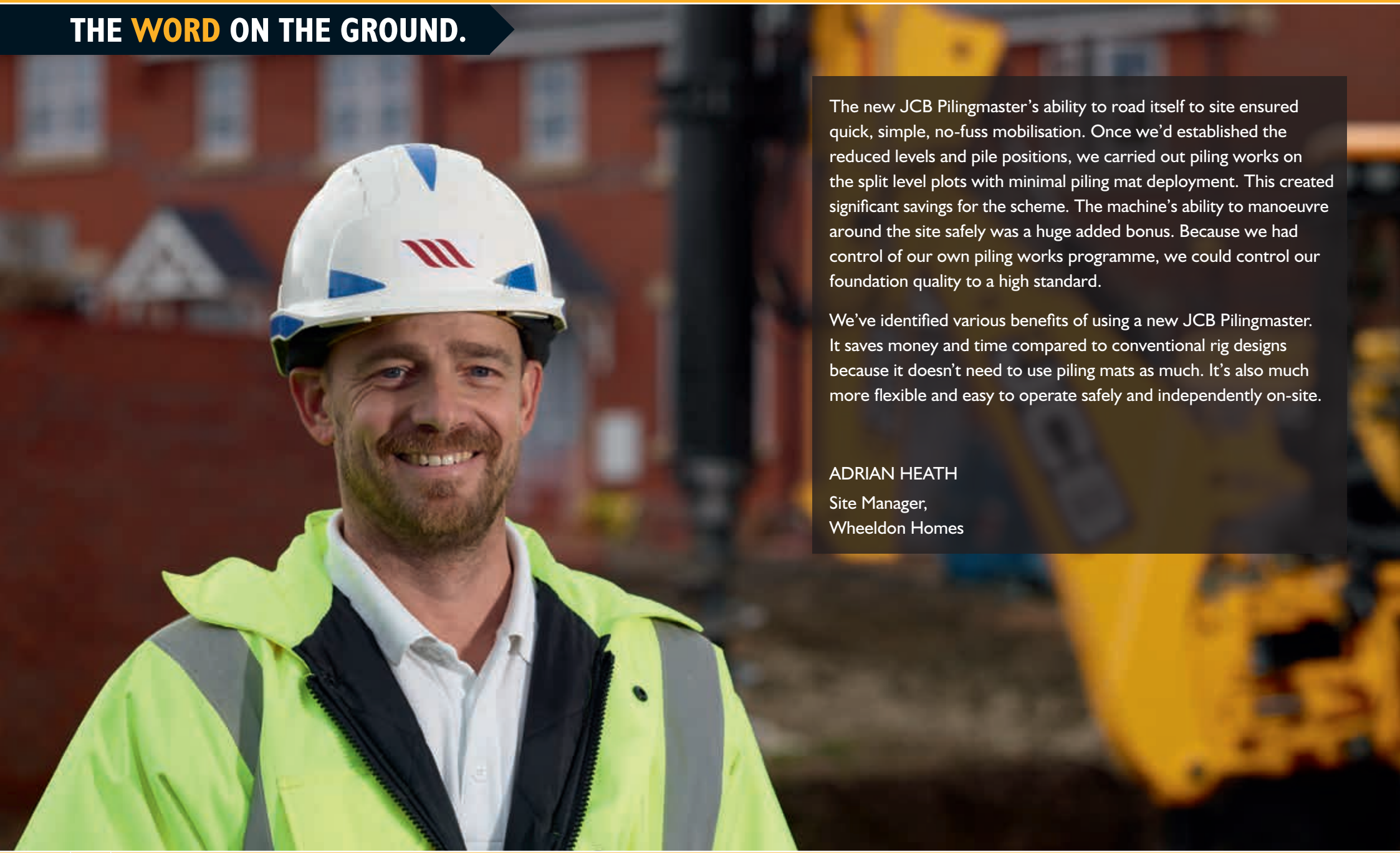

The new JCB Pilingmaster's ability to road itself to site ensured quick, simple, no-fuss mobilisation. Once we'd established the reduced levels and pile positions, we carried out piling works on the split level plots with minimal piling mat deployment. This created significant savings for the scheme. The machine's ability to manoeuvre around the site safely was a huge added bonus. Because we had control of our own piling works programme, we could control our foundation quality to a high standard.

We've identified various benefits of using a new JCB Pilingmaster. It saves money and time compared to conventional rig designs because it doesn't need to use piling mats as much. It's also much more flexible and easy to operate safely and independently on-site.

ADRIAN HEATH
Site Manager,
Wheeldon Homes

A MASTER IN ACTION.

AS PART OF ITS EXTENSIVE TESTING PROGRAMME, WE PUT THE NEW JCB PILINGMASTER TO WORK ON VARIOUS SITES AROUND THE UK. ONE OF THESE WAS THE SECOND-PHASE HEANOR PROJECT RUN BY HOUSING DEVELOPER WHEELDON HOMES.

This project required piled foundations to be installed on eight numbered plots located at the lower level of the site.

Wheeldon Homes used a Pilingmaster to carry out the job, enjoying several key benefits.

Firstly, there was only a minimal requirement for piling mats between the split-level plots.

Then there was the unique backhoe manoeuvrability; operators could get around the congested site safely while performing tough tasks with ease.

What's more, Wheeldon Homes could use the new Pilingmaster's backhoe versatility to clear spoil, saving valuable time and money.

LOCATION: HEANOR, DERBYSHIRE	
Ground type	Fill - stiff clay
Pile depth	8 - 10m
Number of piles	120 (8 plots)
Auger diameter	350 and 450
Piles per shift	One plot per day
Timeframe	10 days

THE WORD FROM THE INDUSTRY.

The JCB Pilingmaster has high manouevrability and limited requirement for a piling mat. This makes the machine highly flexible on-site.

We see the Pilingmaster as an appealing proposition not only to housing developments but also to industries like railways, highways and civil contractors. We continue to be proactive seeking new opportunities for the Pilingmaster.

This machine will allow developers / ground workers to take more ownership of their projects and help to reduce costs.

The Pilingmaster will effectively and efficiently change the working practice and provide simple solutions to foundation requirements.

LAURA HOLLAND

Senior Structural Engineer,
EcoTech Consultant Eng.

A MORE VERSATILE APPROACH.

THE JCB PILINGMASTER IS A TRUE MULTI-FUNCTIONING MACHINE, SUITABLE FOR BOTH PILING AND GROUNDWORKS. THE UNIQUE BACKHOE-BASED DESIGN WITH FRONT LOADER FACILITY MAKES IT FAR MORE VERSATILE THAN TRADITIONAL PILING SOLUTIONS.

1

Loads of different work.

1 The new JCB Pilingmaster's versatile front shovel allows you to clear unwanted spoil from the pile, removing the need for additional support machinery. Ground clearance is reassuringly high and the large 28" tyres help you to achieve maximum productivity on even the most challenging ground.

2 A 6-in-1 shovel is fitted as standard, allowing you to dig, doze, load, grab, grade and backfill – not to mention pile – with just one machine.

3 You can move palletised loads of up to two tonnes with the integrated quickhitch-mounted forks. This attachment also affords optimum visibility to the load.

4 There are three different steer modes, including crab steer; this provides exceptional manoeuvrability on any site and, in the process, minimises ground damage.

5 Choose our unique handheld tool circuit and hose reel as an optional extra to boost versatility even further. The 9m hose reel offers a generous working radius and has a convenient auto retract system.

2

3

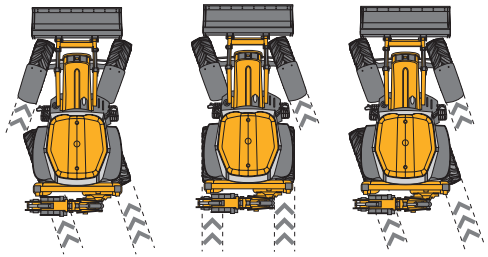
Four-wheel steer Two-wheel steer Crab-steer mode
4

5

LESS SERVICING, MORE SERVICE.

THE NEW JCB PILINGMASTER IS BASED ON THE WORLD'S NUMBER ONE BACKHOE LOADER, AND IT OFFERS THE SAME PEERLESS LEVELS OF SERVICEABILITY. ADDED TO ITS POWER AND PERFORMANCE, THIS MEANS YOU CAN EXPECT MAXIMUM PRODUCTIVITY AND MACHINE UPTIME.

At your service.

1 All under-bonnet daily checks on the new JCB Pilingmaster are automatic, meaning that operators don't need to carry out the task manually.

2 We've designed the piling rig to fold down to ground level for quick and easy servicing.

3 Refuelling is quick and easy to do at ground level thanks to the pannier side-mounted fuel tank.

4 A large 20-litre AdBlue® DEF tank only requires filling every four to five fuel refills, minimising downtime*.

5 The battery and isolator are located behind a lockable front grille, protecting them from theft whilst also allowing easy operator access.

6 Our large one-piece bonnet allows you to access the spacious engine bay and perform all servicing from one side of the machine.

*We recommend filling the AdBlue every time you refuel.

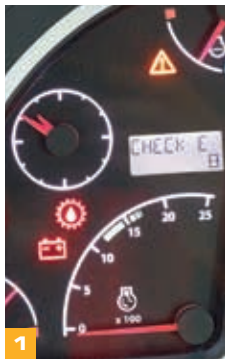

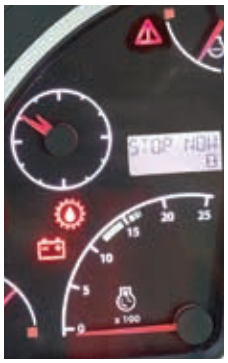

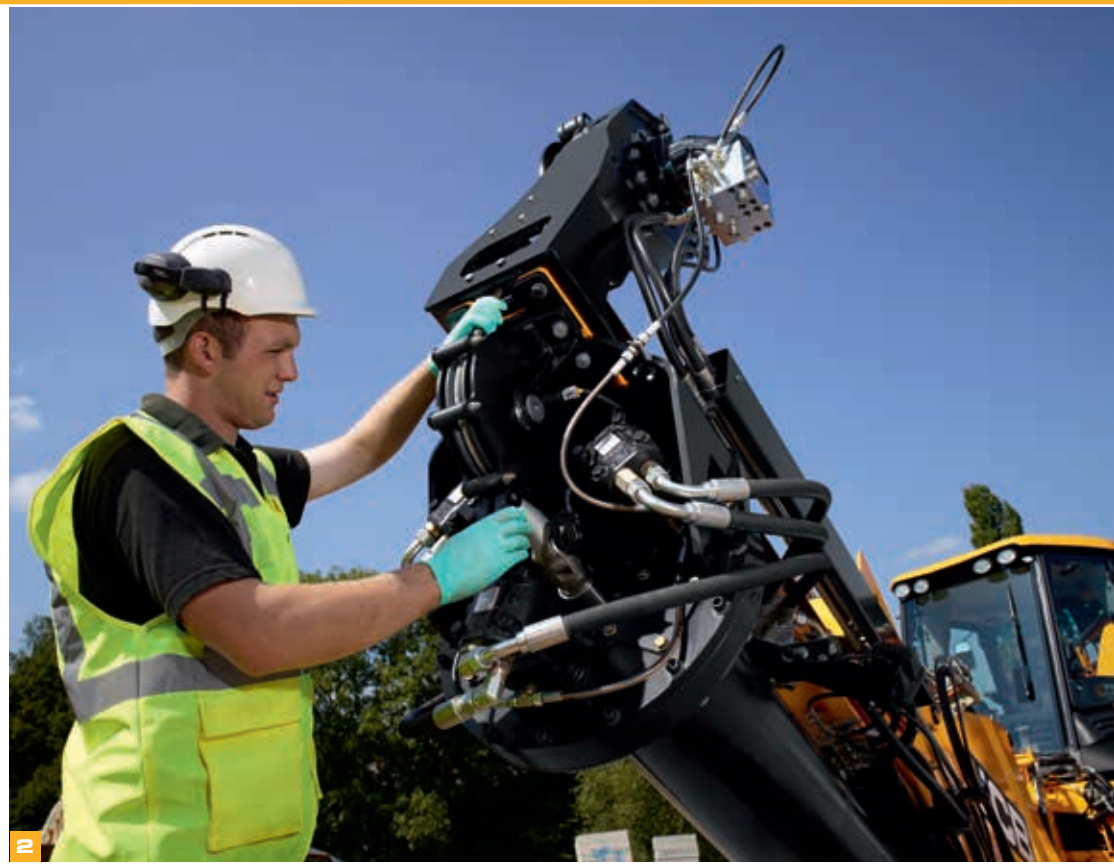

VALUE ADDED.

JCB'S WORLDWIDE CUSTOMER SUPPORT IS FIRST CLASS. WHATEVER YOU NEED AND WHEREVER YOU ARE, WE'LL BE AVAILABLE QUICKLY AND EFFICIENTLY TO HELP MAKE SURE YOUR MACHINERY IS PERFORMING TO ITS FULL POTENTIAL.

1

2

3

1 Our Technical Support Service provides instant access to factory expertise, day or night, while our Finance and Insurance teams are always on hand to provide fast, flexible, competitive quotes.

2 The global network of JCB Parts Centres is another model of efficiency; with 16 regional bases, we can deliver around 95% of all parts anywhere in the world within 24 hours. Our genuine JCB parts are designed to work in perfect harmony with your machine for optimum performance and productivity.

3 JCB Assetcare offers comprehensive extended warranties and service agreements, as well as service-only or repair and maintenance contracts. Irrespective of what you opt for, our maintenance teams around the world charge competitive labour rates, and offer non-obligation quotations as well as fast, efficient insurance repair work.

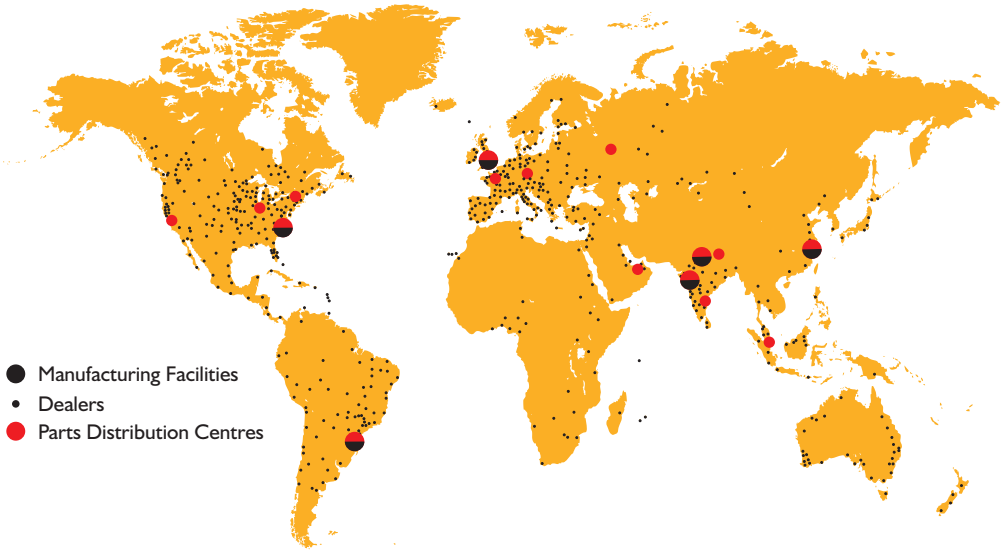

Note: JCB LIVELINK and JCB ASSETCARE may not be available in your region, so please check with your local dealer.

LIVELINK, WORK SMARTER.

JCB LIVELINK USES THE LATEST SATELLITE TECHNOLOGY TO HELP YOU MONITOR AND MANAGE YOUR MACHINE REMOTELY ANYWHERE IN THE WORLD VIA WEB, EMAIL OR MOBILE. SO WHETHER YOU'RE AN OWNER OPERATOR OR RUN A FLEET, LIVELINK CAN RADICALLY IMPROVE THE EFFICIENCY AND SECURITY OF YOUR MACHINES.

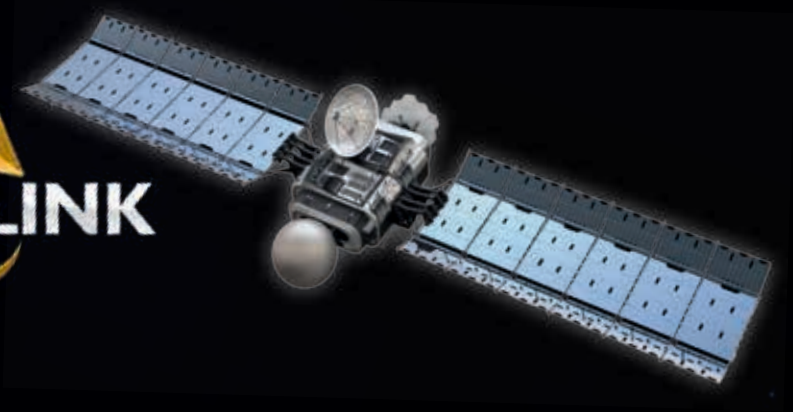

Machine efficiency.

1 By providing information like idle time monitoring and fuel consumption, JCB LiveLink saves you money and improves productivity.

Machine reliability.

2 Accurate hours monitoring and service alerts improve maintenance planning and help rental companies with accurate charging. Technical alerts and maintenance history records help you manage your machines.

Machine monitoring.

3 Keep track of what your machine's been doing throughout the day with regular performance reports accessed via the LiveLink website.

Machine security.

4 LiveLink's real time geo-fencing alerts tell you when machines move out of predetermined zones. Curfew alerts inform you of unauthorised usage. JCB have a history of working with the police to recover stolen machines and tackle fuel theft.

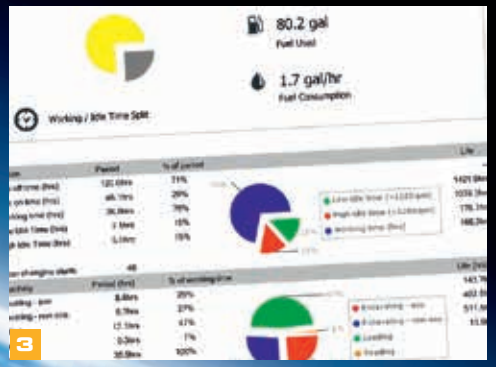

STATIC DIMENSIONS

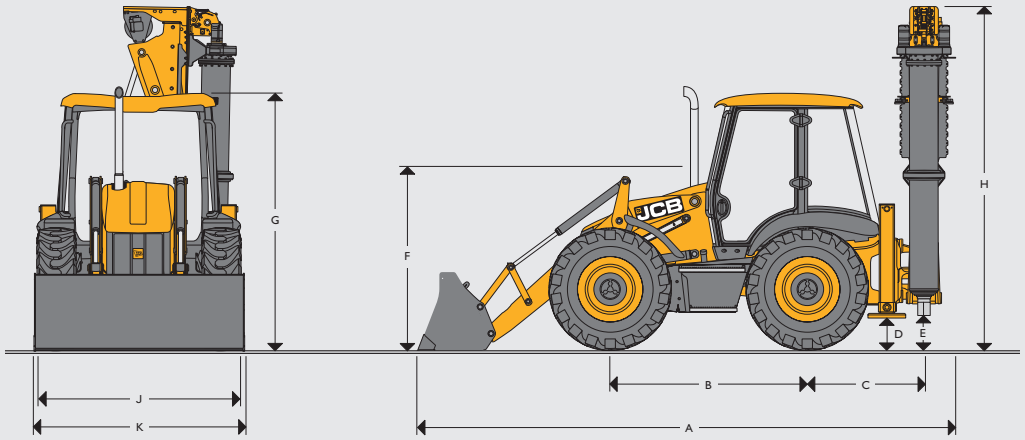

A	Overall length	m	6.20
B	Axle centreline distance	m	2.22
C	Slew centre to rear axle centre distance	m	1.36
D	Stabiliser feet clearance	m	0.34
E	Kingpost clearance	m	0.50
F	Steering wheel centre height	m	1.88
G	Cab roof height	m	3.03
H	Total travel clearance	m	4.00
J	Rear frame width	m	2.36
K	Shovel width	m	2.36

ENGINE (Stage IV Emissions)

Model		EcoMAX
Engine standard		Stage IV
Manufacturer		JCB
Aspiration		Turbocharged & Intercooled
Displacement	litre	4.4
No. of cylinders		4
Bore	mm	103
Stroke	mm	132
Rated engine	rpm	2200
Power ratings		
Rated ISO 14396 (SAE J1995 Gross)	kW	81
Maximum torque		
Max. torque rpm	Nm	516
Max. torque rpm	rpm	1300

SERVICE CAPACITIES

Cooling system	ltr	18.5
Fuel tank	ltr	150
Engine oil with filter	ltr	15
Gearbox with filter	ltr	16
Rear axle	ltr	16
Front drive axle	ltr	16
Hydraulic system incl. tank	ltr	117
DEF tank	ltr	20

LOADER PERFORMANCE

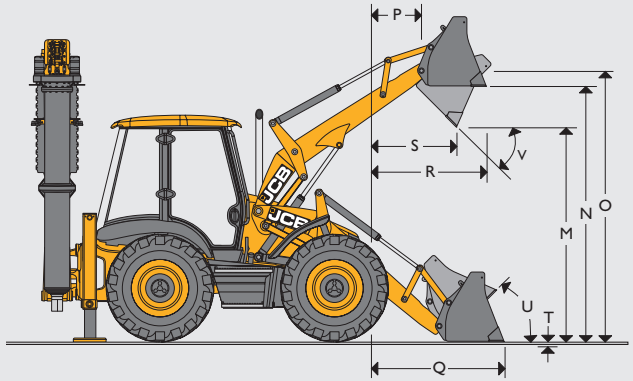

M	Dump height	m	2.69
N	Load over height	m	3.18
O	Loader hinge pin height	m	3.46
P	Pin forward reach	m	0.41
Q	Reach at ground (toe plate horizontal)	m	1.39
R	Max. reach at full height	m	1.17
S	Reach at full height fully dumped	m	0.76
T	Dig depth	m	0.18
U	Roll back at ground	degrees	45°
V	Dump angle	degrees	45°
	Jaw opening width	m	0.95

LOADER PERFORMANCE

		6-in-1 shovel
Loader breakout – shovel	kgf	6590
Loader breakout – arms	kgf	5730
Rated operating capacity*	kg	4378
Clamping force	kgf	2945

*Rated operating capacity as determined according to ISO 14397: 2007

EXCAVATOR / LOADER DIMENSIONS – 4CX PILING MASTER

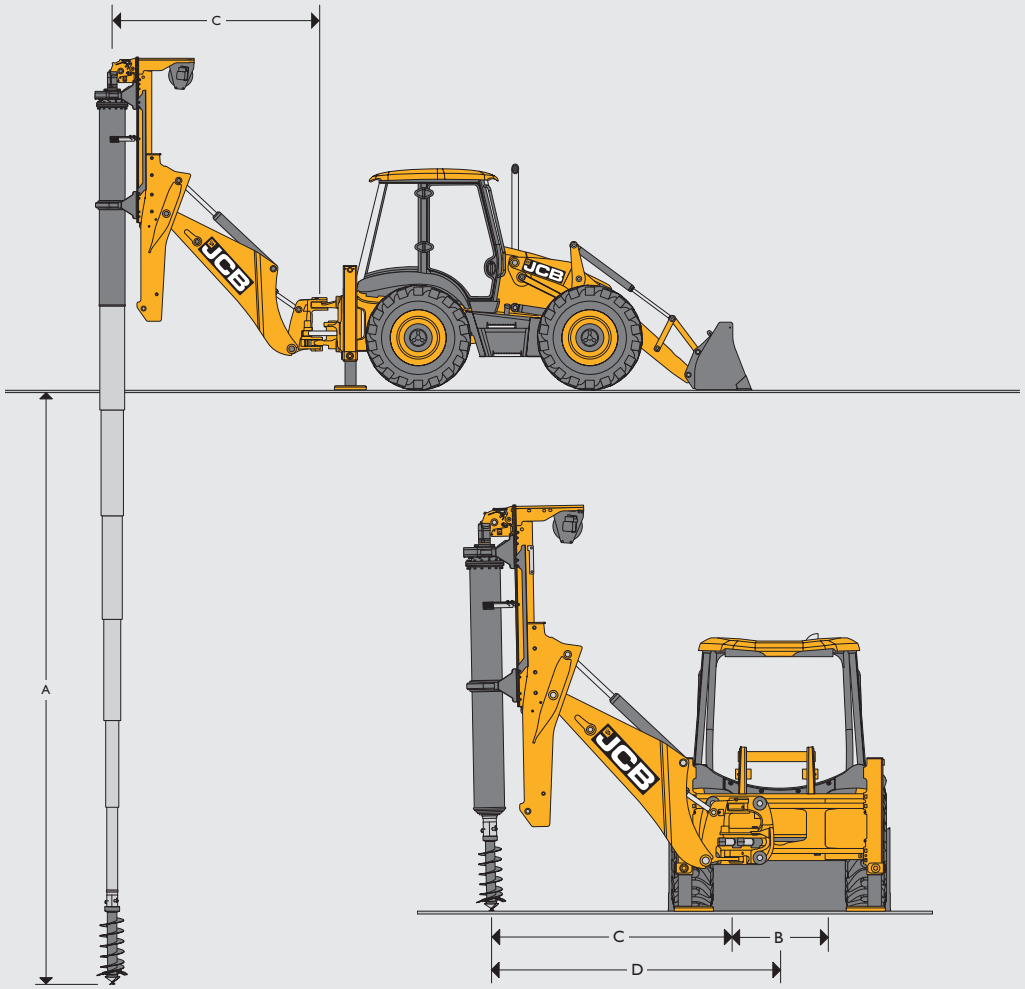

			Piling Rig
	Maximum rotary head torque	Nm	12500
	Winch pullback force	kg	2500
	Mast pullback force	kg	5000
	Mast crowd force (push down)	kg	3300
	Auger / bucket diameter	mm	350 - 600
A	Maximum pile depth	m	14
B	Total kingpost travel	m	1.16
C	Reach from ground level to slew centre	m	2.65
D	Side reach to centre of machine	m	3.20

TRANSMISSION

Model	AWS	
Manufacturer	JCB	JCB
Type	Powershift	Autoshift
Gear selection	Powershift	Powershift
TorqueLock	Standard	Optional
Gear 1	5.0	4.9
Gear 2	9.3	8.1
Gear 3	21.5	11
Gear 4	38.1	17.7
Gear 5	-	29.6
Gear 6	-	38.1

OPERATING WEIGHTS

Operating weight includes machine with 6-in-1 shovel, piling rig, fuel tank and operator.		
Weight	kg	11700

NOISE & VIBRATION LEVELS

Internal dB(A)	75dB(A) - (81kW engine)
External dB(A)	102
Vibration	Hand Arm Vibration 2.5m/s² - Whole Body Vibration 0.5m/s²

HYDRAULIC SYSTEM

Closed centre systems (piston pump) @ 2200rpm	l/min
Advanced EasyControl	165
	bar
System relief pressure	251

SPECIFICATION

LOADER	
Parallel lift loader arms	•
3/8" loader pipework	•
5/8" loader pipework	+
1.2m³ 6-in-1 shovel	•
Hydraulic quickhitch with integrated forks	•
Return to dig	•
Auto SRS	•
Shovel streetpads	•
Clam ram guards	•
Shovel float	•
PILING RIG	
14m telescopic Kelly bar	•
Bi-directional auxiliary	•
2 LED lights rig mounted	•
Powerslide	•
Boom HBCV	•
Boom and dipper lockout	•
Hydraulic winch	•
Depth indicator	•
Angleometers	•
Pressure indicator	•

DRIVELINE/CHASSIS	
81kW (109hp) Tier 4F engine	•
Auto daily checks	•
Grid heater	+
150A alternator	•
40kph 4-speed Powershift transmission	•
TorqueLock	•
6-speed Autoshift transmission	+
Limited slip differential	•
Stabiliser streetpads	•
Large stabiliser feet	+
Rear light guards	•
Red and white chevrons	•
28" XMCL radial tyres	•
Reverse alarm	•
HHTC and 9m hose reel	+

CAB	
Heated air suspension seat	•
Seat headrest	+
Arm rest	•
Seat belt	•
Heater	•
Air conditioning	•
Auto pre-heat	+
Radio speaker kit	•
Coffee machine	+
Tinted glass	•
Front and rear screen wipers	•
Rear one piece window	•
Door ajar stays	•
Tilting steering column	•
Steering wheel knob	•
Telescopic steering column	+
Exterior mirrors	•
8 halogen working lights	•
Interior mirror	•
8 LED worklights	+
Road lights	•
Fog light (region specific)	•
Number plate bracket (region specific)	•
Yellow roof	•
Black roof	+
Yellow fenders with infills	+
Black fenders with infills	•
Excavator style servo controls	•
Servo loader control	•
ISO/SAE changeover	+
Manual park brake	•
Power brakes with split pedals	•
Electronic throttle	•
Beacon	•
Emergency stop system	•
Fire extinguisher (UK only)	•
Key/keypad immobilser	+
LiveLink	•
Instrument vandal guard	+
Toolbox	•

STANDARD •

OPTIONAL +

ONE COMPANY, OVER 300 MACHINES.

Your nearest JCB dealer

9999/5921 en-GB 03/17 Issue 2

JCB Pilingmaster

Gross power: 81kW (109hp) Maximum drilling depth: 14m (45' 11")
Maximum head torque: 12500Nm)

JCB Sales Limited, Rocester, Staffordshire, United Kingdom ST14 5JP.
Tel: +44 (0)1889 590312 Email: salesinfo@jcb.com
Download the very latest information on this product range at: www.jcb.com

©2015 JCB Sales. All rights reserved. No part of this publication may be reproduced, stored in a retrieval system, or transmitted in any form or by any other means, electronic, mechanical, photocopying or otherwise, without prior permission from JCB Sales. All references in this publication to operating weights, sizes, capacities and other performance measurements are provided for guidance only and may vary dependant upon the exact specification of machine. They should not therefore be relied upon in relation to suitability for a particular application. Guidance and advice should always be sought from your JCB Dealer."JCB reserves the right to change specifications without notice. Illustrations and specifications shown may include optional equipment and accessories. The JCB logo is a registered trademark of J C Bamford Excavators Ltd.